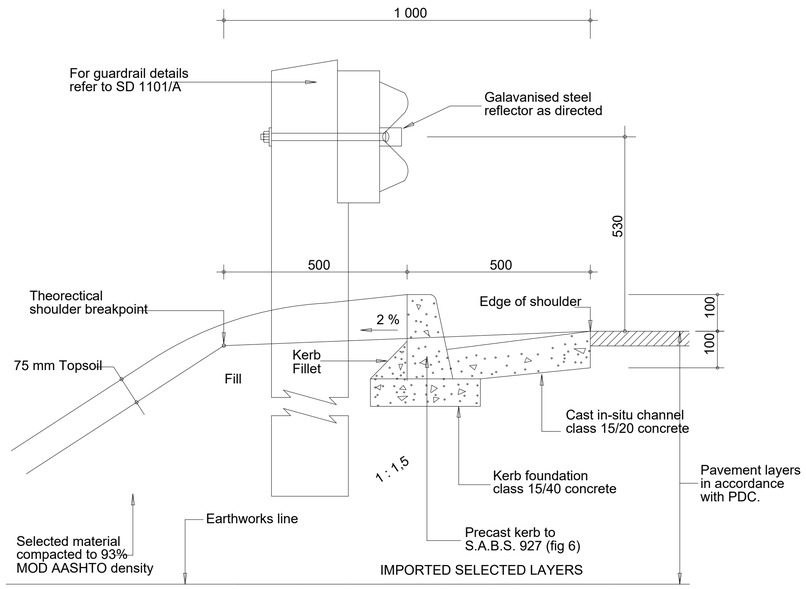

GUARDRAIL INSTALLATION WITH KERB AND CHANNEL

Scale : 1 : 10

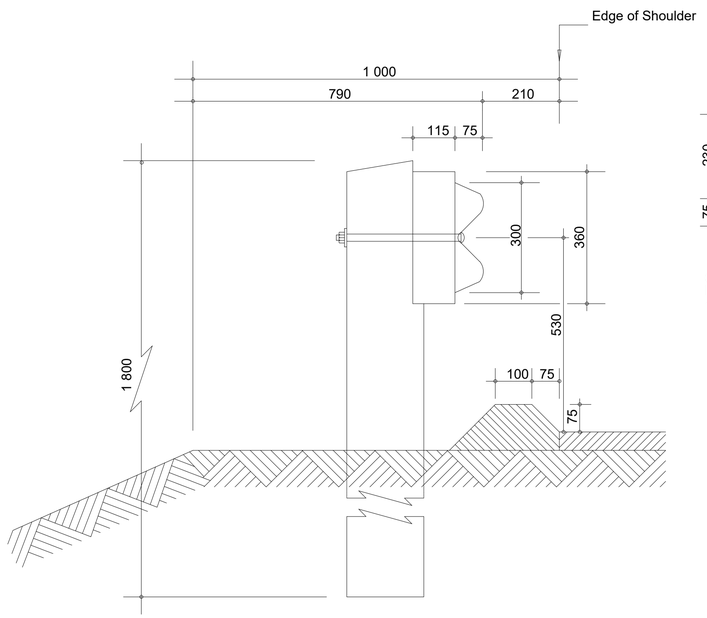

DETAIL OF ASPHALT BERM

Scale : 1 : 10

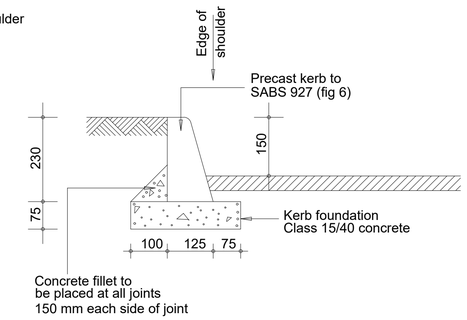

KERB ONLY

Scale : 1 : 10

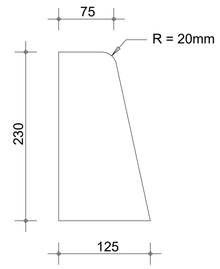

PRECAST KERB TO SABS 927 (Fig. 6)

Scale 1 : 5

NOTES :

1. Construction joints to be provided in cast in-situ work at 2,00m intervals.
2. Expansion joints consisting of approved preformed joint filler board 13mm thick cut to required shape to be provided where indicated.
3. The 500 Kerb and Channel may be increased to 1000 Kerb and Channel where required.

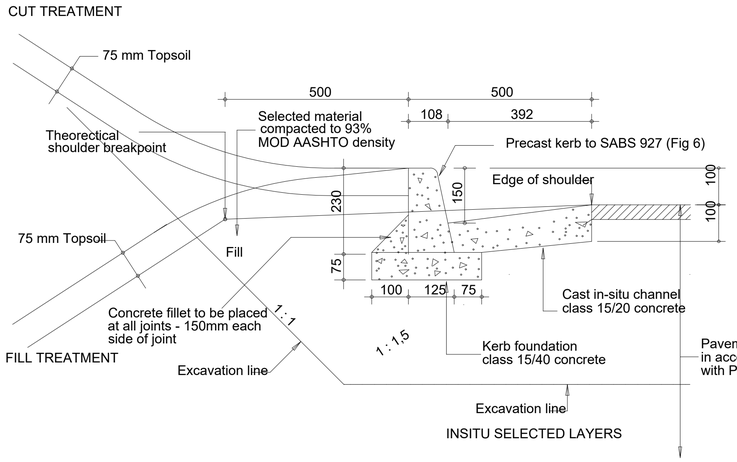

KERB AND CHANNEL

Scale : 1 : 10

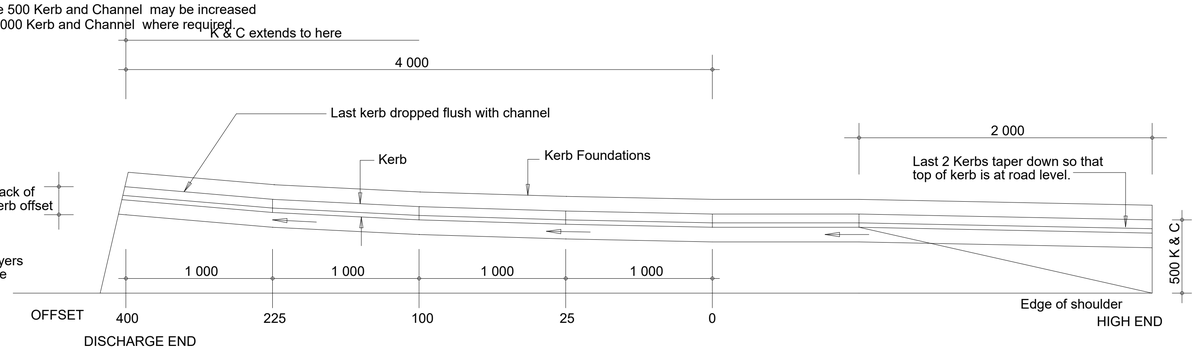

PLAN OF 500 KERB & CHANNEL END

Scale : 1 : 25

DATE	STATUS	REV.	REVISION DESCRIPTION	REFERENCE DRAWING No.	REFERENCE DRAWING TITLE

NOTES:

		SIGNATURE
DESIGNED BY	M.TSHUMA	N/A
DRAWN BY	Z.BIYELA	N/A
DESIGN CHECKED	T.ZUMA	N/A
DRAWING CHECKED	M.TSHUMA	N/A
Pr TECH/ Pr ENGINEER APPROVAL		
NAME	T.ZUMA	SIGNATURE
DATE		PROFESSIONAL REG No. 201170074

ENGINEER: MAFAHLENI ENGINEERS AND PROJECT MANAGERS
49 Ferreira Street
Nelspruit
1200
DEPARTMENT: CIVIL

CLIENT: Emalahleni Local Municipality
EMALAHLENI MUNICIPALITY
P.O. Box 3
Emalahleni
1035

PROJECT TITLE: PROPOSED REHABILITATION OF BEATTY & DIEDERICKS

DRAWING TITLE: TYPICAL DETAILS FOR GUARDRAIL INSTALLATION

DRAWING STATUS DESCRIPTION: D=DEVELOPMENT T=TENDER P=PLANNING C=CONSTRUCTION A=AS BUILT

SCALE	SHEET	SHEET SIZE
NTS	1OF1	A1

MAFAHLENI ENGINEERS DRAWING NUMBER

ME PROJECT DESCRIPTION	DISCIPLINE	NUMBER	STATUS	REV
EMAL- 2024 - RDS -	021	- T	-	00