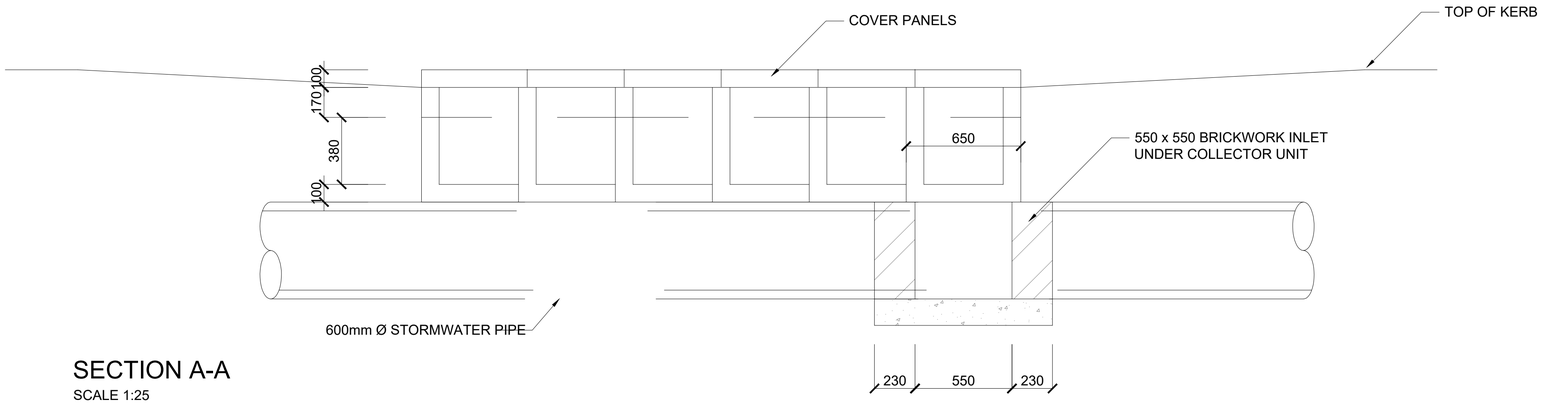

SECTION A-A

SCALE 1:25

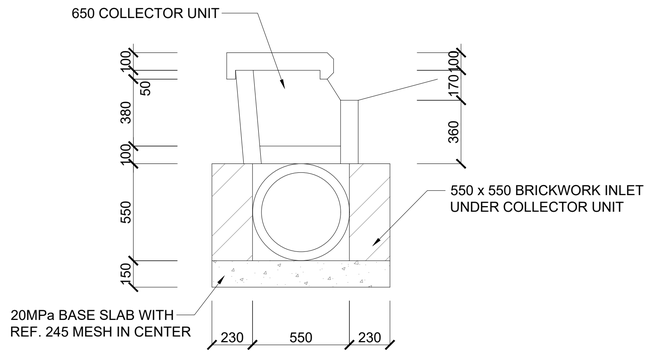

SECTION B-B

SCALE 1:25

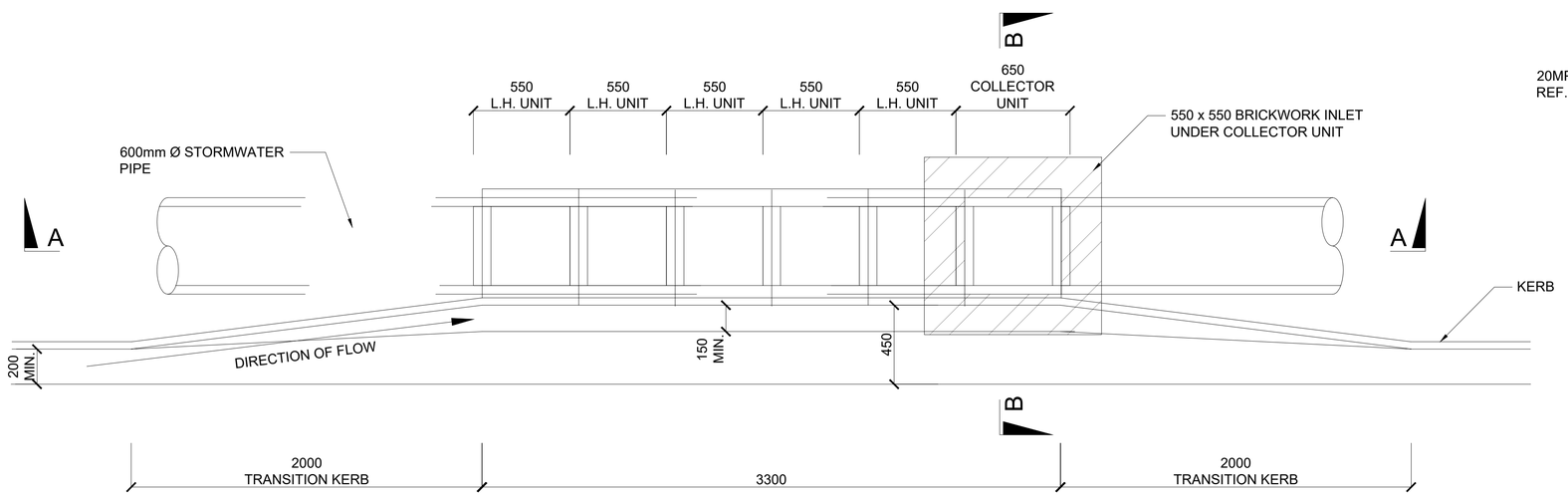

PLAN

SCALE 1:25

DATE	STATUS	REV	REVISION DESCRIPTION	REFERENCE DRAWING No.	REFERENCE DRAWING TITLE

NOTES:

		SIGNATURE
DESIGNED BY	M.TSHUMA	N/A
DRAWN BY	Z.BIYELA	N/A
DESIGN CHECKED	T.ZUMA	N/A
DRAWING CHECKED	M.TSHUMA	N/A
Pr TECH/ Pr ENGINEER APPROVAL		
NAME	T.ZUMA	SIGNATURE
DATE		PROFESSIONAL REG No. 201170074

ENGINEER: MAFAHLENI ENGINEERS AND PROJECT MANAGERS
49 Ferreira Street
Nelspruit
1200
DEPARTMENT: CIVIL

CLIENT: Emalahleni Local Municipality
EMALAHLENI MUNICIPALITY
P.O. Box 3
Emalahleni
1035

PROJECT TITLE: PROPOSED REHABILITATION OF BEATTY & DIEDERICKS

DRAWING TITLE: TYPICAL DETAILS FOR CATCHPIT

DRAWING STATUS DESCRIPTION: D=DEVELOPMENT T=TENDER P=PLANNING C=CONSTRUCTION A=AS BUILT

SCALE	SHEET	SHEET SIZE
NTS	1OF1	A1

MAFAHLENI ENGINEERS DRAWING NUMBER

ME PROJECT DESCRIPTION	DISCIPLINE	NUMBER	STATUS	REV
EMAL- 2024 - RDS -		016 -	T -	00